上海七洋液压

Seven Ocean Hydraulics

Your Reliable Hydraulic Component Manufacturer

Construction Mobile

目录 INDEX

- 上海七洋公司简介 Company Profile
- 产品 Products
  1. 推拉型电磁换向阀 Push-Pull Solenoid Directional Control Valve
  2. 低功率型电磁阀 Low Wattage Type (5W) / Solenoid Operated Directional Control Valve
  3. 多路阀 Stacking Valve
  4. 操纵阀 Control Valve
  5. 插式电磁阀 Cartridge Solenoid Valves
  6. 比例方向控制阀 Proportional Directional Valve







Taiwan
Shanghai
Zhejiang

- 湿式电机泵



- 电磁阀



- 液压系统



- 叠加阀



上海七洋液压机械有限公司位于上海松江，为台湾七洋空油压工业股份有限公司在中国大陆的全资子公司，主要生产电磁方向控制阀、叠加阀、比例阀、复合阀、电机泵及液压泵站等液压组件产品

Seven Ocean Hydraulics Shanghai is a subsidiary company of Seven Ocean Taiwan. With 30 years worth of experience designing and manufacturing quality valves and hydraulics systems, Seven Ocean strives in our pursuit for high customer satisfaction and quality parts.

您可信赖的液压品牌

Your Reliable Hydraulic Component Manufacturer

推拉型电磁换向阀

Push-Pull Solenoid Directional Control Valve

特性 FEATURES

- 广泛应用于建筑机械，矿山作业机械和工程车辆等
- 适于用在变速器的推拉型电磁阀
- 抗高温，低温性佳 (–25˚C ~ 90˚C)
- 污染度高 (NAS12 级以内)



- Applicable in construction and mining machinery.
- Used for automatic gearboxes.
- Temperature range (-25°C ~ 90°C).
- Minimal contamination levels.

技术参数 SPECIFICATIONS

最大流量 Max. Flow Rate	15 l/min (at 7mPa)
最高工作压力 Max. Operating Pressure	7 mPa
最大允许背压 Max. Permissible Back Pressure	2 mPa
工作环境温度 Ambient Temp. Range	-25°C~60°C
介质温度范围 Hydraulic Fluid Temp.	-25°C~90°C
介质黏度范围 Viscosity Range	13 ~ 300 mm^2/s
介质过滤精度要求 Fluid Cleanliness	Particles smaller than 25μ 以下
耐震性能 Vibration Tolerance	JIS D1601 Type3 Class-D Stage-7
防护形式 Degree of Protection	IP65
最高换向频率 Max. Switch Frequency	120 次 times/min
安装表面 Mounting Pattern	ISO 4401-AB-03-4-A

适用电压 Voltage (V)	保持电流 Holding Current (A)	保持电力 Holding Power (W)	适用电压范围 Permissible Voltage (V)	隔离等级 Insulation Grade	线圈隔离等级 Coil Insulation Class	绝缘电 Insulation Resistance (MΩ)
24	0.97	25	21.6~26.4	B	H (180°C)	>50
12	1.83	25	10.8~13.2			

低功率型 (5W)/电磁阀

Low Wattage Type (5W)/ Solenoid Operated Directional Control Valve

特性 FEATURES

DSE	DSD
	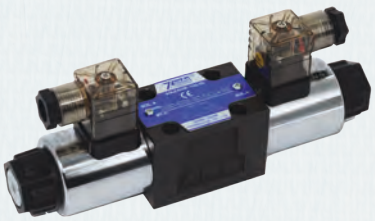
• 低电流、低电力 • 线圈温升小 • 动作稳定可靠 • 使用于ISO国际标准安装面 • Low electric current and power reduces operating costs • Low temperature, for longer working life • Stable and reliable operation • ISO standard mounting pattern	• 高压、大流量 • 强度大、变形小 • 低压降小型、紧凑 • 动作稳定可靠、寿命长 • 使用于ISO国际标准安装面 • Low pressure drop • Compact design • Stable and reliable operation • IP67 high dust resistance and water resistance • ISO standard mounting pattern

技术参数 SPECIFICATIONS

	DSE	DSD
最大流量 Max. Flow Rate	45 l/min	110 l/min
最高工作压力 Max. Operating Pressure	16 mPa	35 mPa
最大允许背压 Max. Permissible Back Pressure	16 mPa	22 mPa
工作环境温度 Ambient Temp. Range	-15°C ~ 50°C	
介质温度范围 Hydraulic Fluid Temp.	-15°C ~ 70°C	
介质黏度范围 Viscosity Range	15 ~ 400 mm^2/s	
介质过滤精度要求 Fluid Cleanliness	Particles smaller than 25 μ 以下	
最高换向频率 Max. Switch Frequency	240次 times/min	300次 times/min (AC/DC) 120次 times/min (RF)
工作介质 Hydraulic Oil	ISO VG32, 46	

多路阀 Stacking Valve

特性 FEATURES

- 用于內燃式推高机和电瓶推高机
- 阀为铸造流道、压力损失低，阀体与阀杆均以数控设备加工，精度高、阀杆动作灵活、复位可靠、满足用户要求
- Typically used in internal combustion forklifts and battery powered forklifts. Can be customized.
- Used to control forklifts' height level, tilt and balance. Can also be customized for other usages/settings.
- Minimal pressure loss and smooth spool operation.



技术参数 SPECIFICATIONS

形式 Model	STV-07	
定格流量 Rated Flow	70 l/m	
联数 Number of Sections	1~4 (n)	
最高压力 Max. Operating Pressure	20.6 mPa (210 kgf/cm^2)	
质量 Mass	3.4 kg + 3.2 n	
回路 Circuit	Parallel	
轴心推力 Spool Force	194 N (19.8 kgf)	
轴心行程 Spool Stroke	7 mm	
容许背压 Permissible Back Pressure	1.5 mPa (15 kgf/cm^2)	
标准接口 Standard Ports	P Port	7/8-14 UNF
	A, B Port	G 1/2

型號 MODEL

STV - 07 - VTHG - 10 - 01
1 2 3 4 5

1 片式多路方向阀 Stacking Directional Control Valve

2 6通径 NG6

3 联数搭配 Sections Arrangement

- VT: 上下+倾斜 / Vertical+Tilt
- VTH: 上下 + 倾斜 + 平移 / Vertical + Tilt + Horizontal
- VTHG: 上下 + 倾斜 + 平移 + 夹具 / Vertical + Tilt + Horizontal + Fixture

4 设计序号 Design Number

5 压力设定 Pressure Set

01: 安全压力 Safety Pressure 190 kgf/cm^2，方向盘压力 Steel Wheel Pressure 85 kgf/cm^2

液压迴路 GRAPHIC SYMBOL

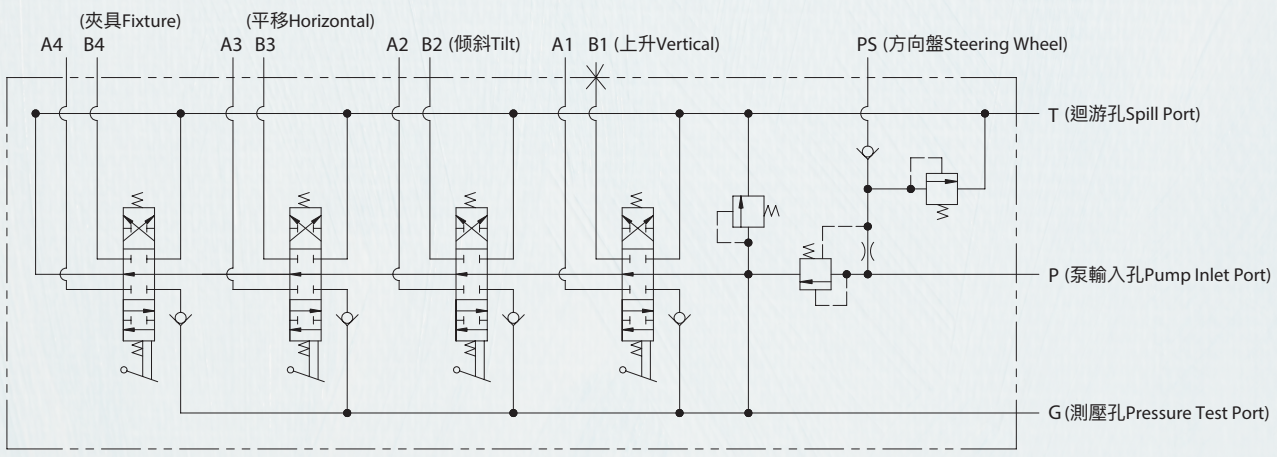

操纵阀 Control Valve

特性 FEATURES



- 用于控制叉车的变速器与方向前进后退及停止之操纵
- 时动阀的设计能使油进入传动器时动作平顺
- 当压力上升时蓄压器会使传动器减少震动现象，并使传动器反应加快
- Well-suited for construction trucks, with good control of forward, backwards and stopping position.
- Best used in gearboxes.
- Designed for a smoother oil flow.
- Pressure accumulator reduces vibration and improves transmitter movement.

技术参数 SPECIFICATIONS

最大流量 Max. Flow Rate	48 l/min
最高压力 Max. Operating Pressure	11~13 bar
电源 Power Source	DC12 & DC24
方向 Direction	前进、后退 / Forward, Backwards
底板外加 Extra Subplate Available	

液压迴路 GRAPHIC SYMBOL

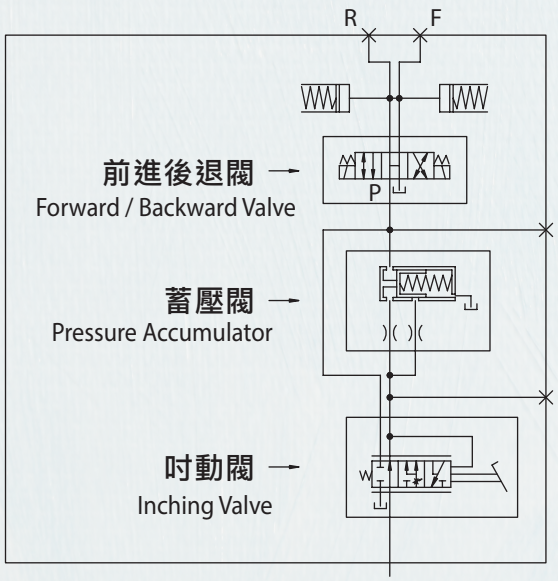

插式电磁阀 Cartridge Solenoid Valves

特性 FEATURES

- 连续负载电螺管
- 坚固的提动阀芯和柱塞，使用寿命长
- 高效的湿电枢结构
- 各式选配线圈电压和端接
- 标准滤网
- 工业通用孔徑
- 紧凑的尺寸

- Continuous-duty solenoid
- Hardened poppet and plunger for long life
- Efficient wet-armature construction
- Optional coil voltages and terminations
- Filter screen standard
- Industry common cavity
- Compact size

7CSV-08-20-D*-E-10



7CSV-08-21-D*-E-10



型號 MODEL

7CSV - 08 - 20 - D24 - E - 10
1 2 3 4 5 6

1	插式电磁阀 Solenoid Valve
2	尺寸 Size
3	液压迴路 Graphic Symbol
4	电压 Voltage
	• D24 : DC24V • D12 : DC12V
5	线圈 Coil Connection
	• Omit : With Coil • E : Standard Coil
6	设计序号 Design Number

技术参数 SPECIFICATIONS

Model	Size	Max. Pres. (MPa)	Max. Flow (L/min)	Filtration (μm)	Weight (Kg)
7CSV	08	20.7	30	25	0.24

插式电磁阀 Cartridge Solenoid Valves

液压迴路 GRAPHIC SYMBOLS

7CSV-08-20	7CSV-08-21	7CSV-08-22	7CSV-08-23	7CSV-08-24	7CSV-08-25	7CSV-08-26
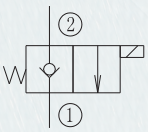	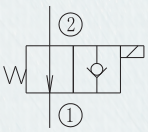	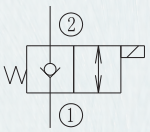	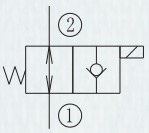	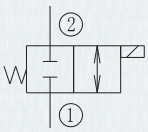	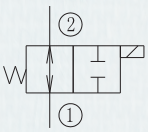	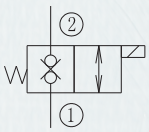

安装尺寸图 INSTALLATION DIMENSIONS

- MODEL: 7CSV-08-20/22/24/25/26
- MODEL: 7CSV-08-21/23
- CAVITMES: VC08-2

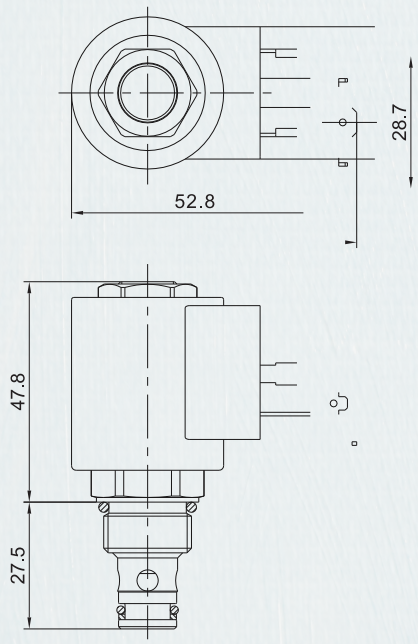

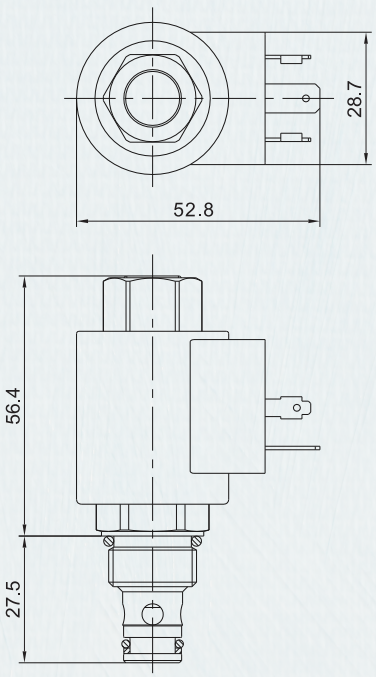

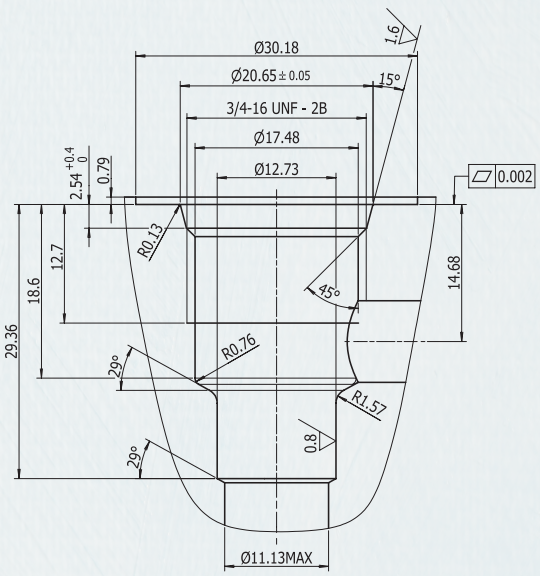

插式电磁阀 Cartridge Solenoid Valves

特性 FEATURES

- 连续负载电螺管
- 坚固的提动阀芯和柱塞，使用寿命长
- 高效的湿电枢结构
- 各式选配线圈电压和端接
- 标准滤网
- 工业通用孔徑
- 紧凑的尺寸
- Continuous-duty solenoid
- Hardened poppet and plunger for long life
- Efficient wet-armature construction
- Optional coil voltages and terminations
- Filter screen standard
- Industry common cavity
- Compact size

7CSV-08-33-D*-E-10



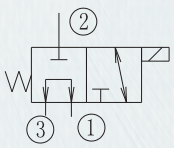

GRAPHIC SYMBOL

7CSV-08-47-D*-E-10



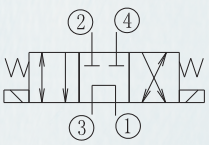

GRAPHIC SYMBOL

型號 MODEL

7CSV - 08 - 33 - D24 - E - 10
1 2 3 4 5 6

1	插式电磁阀 Solenoid Valve
2	尺寸 Size
3	液压迴路 Graphic Symbol
4	电压 Voltage
	• D24 : DC24V • D12 : DC12V
5	线圈 Coil Connection
	• Omit : With Coil • E : Standard Coil
6	设计序号 Design Number

技术参数 SPECIFICATIONS

Model	Size	Max. Pres. (MPa)	Max. Flow (L/min)	Filtration (μm)	Weight (Kg)
7CSV	08-33	20.7	18.9	25	0.25
7CSV	08-47	20.7	11.4	25	0.41

插式电磁阀 Cartridge Solenoid Valves

安装尺寸图 INSTALLATION DIMENSIONS

● MODEL: 7CSV-08-33

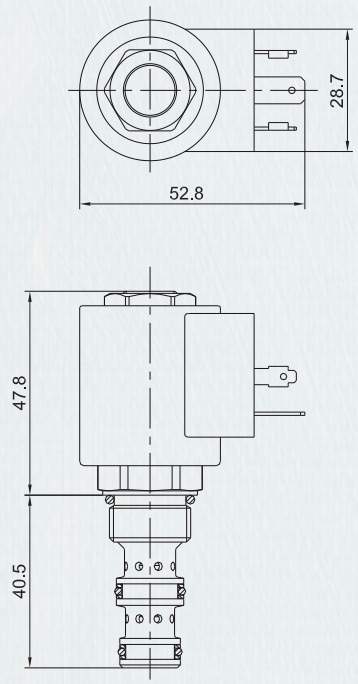

● MODEL: 7CSV-08-47

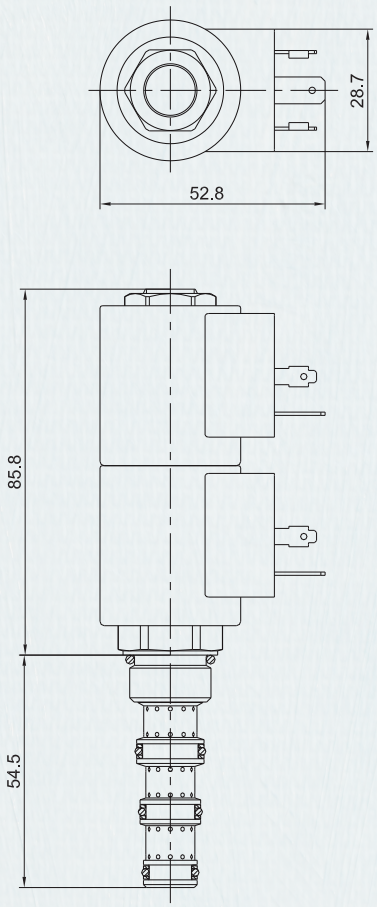

● CAVITMES: VC08-3

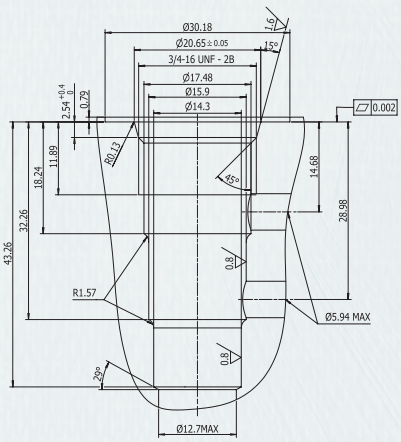

● CAVITMES: VC08-4

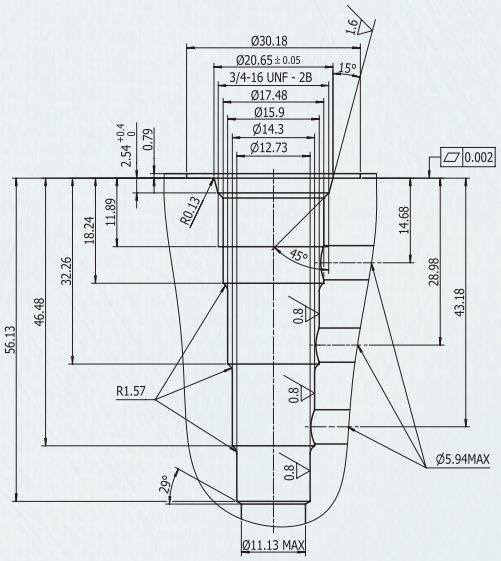

比例方向阀

符合ISO4401 G03安装规格

4/3 - Proportional Directional Valve

Subplate to ISO4401 G03

不含位移传感器 Without LVDT

7EFB1G03



含位移传感器 With LVDT

7EFC1G03

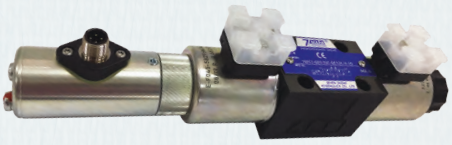

特性 FEATURES

- 优化的五腔阀体，确保高流量
- 标准化的ISO 4401 G03接口可简单互换
- 滞后现象较小
- 使用寿命长，強化的套筒和线轴使磨损最小
- 可选择是否带LVDT位移传感器
- 工作压力: P, A, B = 350 bar, T = 210 bar
- 流量最大可達 40 l/min

- High flow rate from optimized 5 chamber housing
- Simple exchangeability by standardized ISO 4401 G03 interface
- Small hysteresis by polishing of moving parts
- Long life cycle times and minimal wear by hardened sleeve & spool
- With or without LVDT
- Operating pressure: P, A, B = 350 bar, T = 210 bar
- Max flow = 40 l/min

放大板 Amplifier



比例方向阀 带放大器

符合ISO4401 G03安装规格

4/3 - Proportional Directional Valve With Integrated Amplifier

Subplate to ISO4401 G03

不含位移传感器 Without LVDT

7EFB2G03



含位移传感器 With LVDT

7EFC2G03



特性 FEATURES

- 优化的五腔阀体，确保高流量
- 标准化的ISO 4401 G03接口可简单互换
- 滞后现象较小
- 使用寿命长，强化的套筒和线轴使磨损最小
- 可选择是否带LVDT位移传感器
- 工作压力: P, A, B = 350 bar, T = 210 bar
- 流量最大可達 40 l/min

- High flow rate from optimized 5 chamber housing
- Simple exchangeability by standardized ISO 4401 G03 interface
- Small hysteresis by polishing of moving parts
- Long life cycle times and minimal wear by hardened sleeve & spool
- With or without LVDT
- Operating pressure: P, A, B = 350 bar, T = 210 bar
- Max flow = 40 l/min

应用功能 FUNCTION

比例方向控制阀允许连续控制流量，并有助于平稳切换和精确定位。 它们的特点是重复性好，分辨率高。当使用带有感应式位移传感器的阀门时，磁滞可以大大降低，并且通过适当的调节电子装置，可以大大提高阀门的动态性能。

Proportional directional control valves allow continuous control of the volume flow and facilitate smooth switching and exact positioning procedures. Their features are good repeatability, very good resolution. When using valves with an inductive displacement transducer, the hysteresis can be reduced considerably and with an adequate regulating electronic the dynamic of the valves can be raised considerably.

七洋液压提供各专业领域液压站设计规划

液压泵站
Hydraulic Power System



叠加阀
Modular Valves



湿式电机泵
Motor Pump



电磁方向控制阀
Solenoid Valve

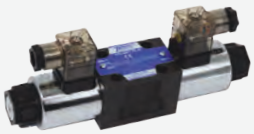

1 铸造行业

压铸机
Die Casting Machine



2 环保回收

破碎机、撕碎机、挤出机
Recycling & Pelletizing System



(图片提供: 张家港艾斯瑞特)

3 塑胶射出

各类塑胶射出成型：
橡塑、硫化机
Injection Machine

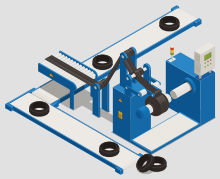

4 机床行业

龙门铣床、车床、折床、
压床、锯床
Milling Machine,
Lathe, Bending Machine,
Press Machine

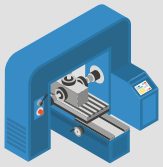

5 瓦愣行业

单面机、双面机、
原纸架
Single Facer, Real Stand,
Double Facer

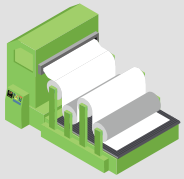

上海市松江区中山街道茸兴路17号
TEL: 021-5778-1781
FAX: 021-5778-0103
广东办事处
TEL: 0769-8348-8277
CELL: 139-1620-7737
sales@sevenocean.com.cn
www.7ocean.com

202011C